FLOMAG®
Measurement
& Control Equipment

Magnetic Flow Meter

FLOMAG®-ICM

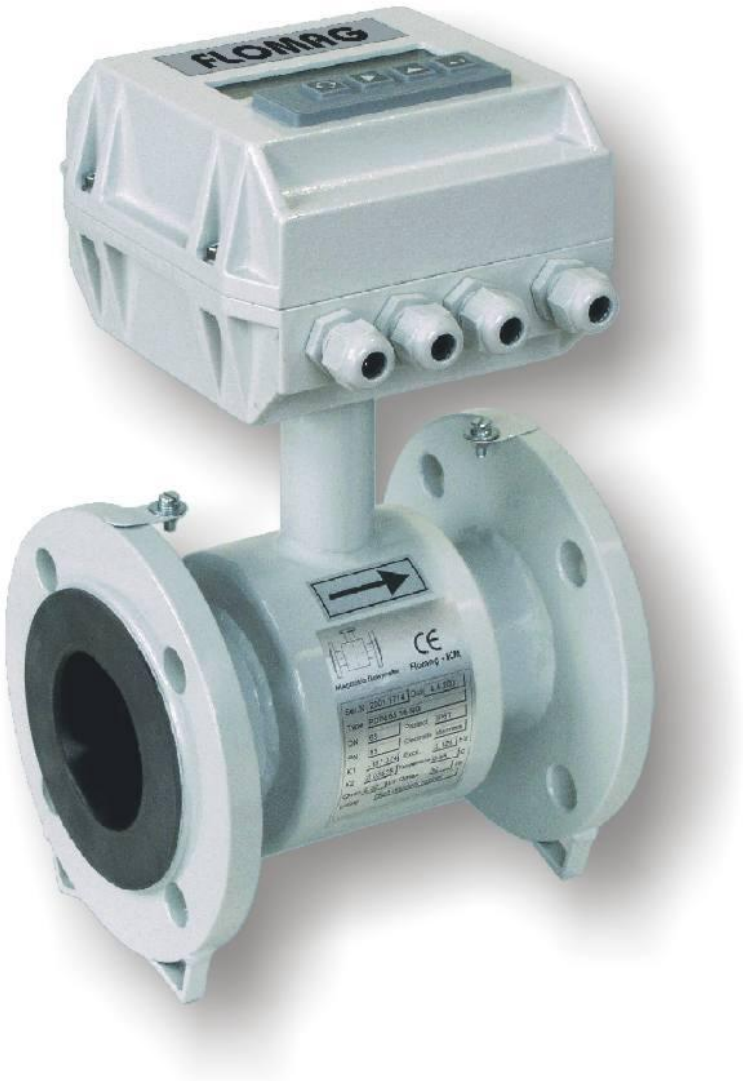

FLOMAG s.r.o.
Šumavská 5
CZ-602 00 Brno
Czech Republic
tel: +420 541212539
fax: +420 549240356
e-mail: info@flomag.com
www.flomag.com

Operation Manual

INTRODUCTION

Measurement Principle

An induction flow meter is a device for volume flow measurement of electrically conductive fluids. The measurement principle is based on Farraday's law of electromagnetic induction. A sensor consists of a non-magnetic tube coated internally with non-conductive lining, measuring electrodes and two coils generating an electromagnetic field. Flowing fluid creates a conductor. Magnetic field induces voltage **U** in this conductor. It is proportional to magnetic induction **B**, distance of electrodes **d** (conductor length) and flow rate **v**. **U = B x d x v.** Since magnetic induction and distance of electrodes are fixed, the induced voltage is proportional to the flow rate of fluid in the tube. The flow rate multiplied by the cross-section of the tube gives the volume flow rate. **Q = v x S.**

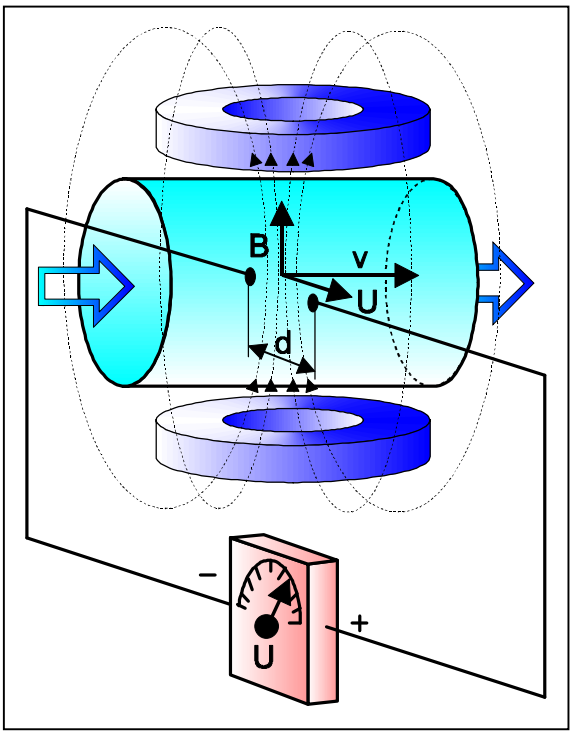

Fig. 1: Measurement principle.

Technical Solution

The induction flow meter itself consists of two basic components – a flow sensor and an evaluating unit. The evaluating unit can be either an integrated part of the sensor, or a separated one connected using a cable with the sensor.

The sensor consists of a non-magnetic tube with a non-conductive lining, measuring electrodes, excitation coils and necessary wiring. Various sensor versions enable to connect them to running pipeline using flanges (type **P**), screw joints (gas thread type **G**, or food industry thread type **V**), or in a sandwich manner between flanges with bolts (type **B**). Non-conductive lining is made of technical rubber (types **TG**, **MG** or **NG**) or teflon (type **T**). For detailed technical description of sensors see chapter Sensor Specifications.

The evaluating unit generates coil excitation current, processes the signal from measuring electrodes, displays measured data, and generates output signals. The current for excitation coils has a constant value and is pulse generated with alternating polarity to avoid permanent magnetization of the sensor. The pulse frequency is adjustable to 6.25 Hz or 3.125 Hz. With respect to greater magnetic field inertia, the excitation frequency 3.125 Hz is chosen always for sensors with inner diameter greater than 100 mm. For lower internal diameters, the excitation frequency 6.25 Hz can be chosen if more rapid response to change of the flow rate is required; however, the lower excitation frequency gives more accurate results. Measurement of the voltage induced on measuring electrodes is always carried out in the end of the excitation pulse when the magnetic field is already stable. Each pulse is followed by a refreshing pause. For detailed description of the evaluation unit see chapter Converter Specifications.

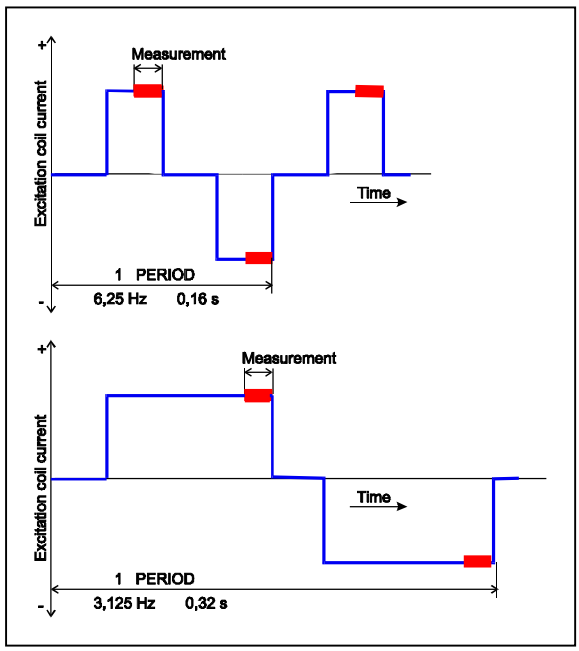

Fig. 2: Course of the excitation current.

Flow Meter FLOMAG–ICM Features

The induction flow meter FLOMAG-ICM is a device for measurement of volume flow rates of conductive fluids in a closed pipeline. It allows measurement in both directions, with high accuracy and in wide range of flow rates (0.1 - 10 m/s). The minimum required conductivity of measured medium is 20 μS/cm; for fluids with conductivity 5-20 μS/cm consult the use of the induction flow meter with manufacturer.

The evaluation unit enables displaying of measured values on a two-line alphanumeric display and changing of many measuring device operational parameters from a keypad. It has got two binary outputs available (frequency, pulses, limit states), as well as an active current output and a digital communication feature. User can change all output functions and parameters during operation.

If required, the user can combine any sensor FLOMAG-ICM with any evaluation unit FLOMAG-ICM without need of calibration of the whole device on a testing line (this does not apply for rated measuring devices). It is only necessary to store the calibration constants and excitation frequency listed on the type plate of the used flow sensor into the memory of the electronic unit.

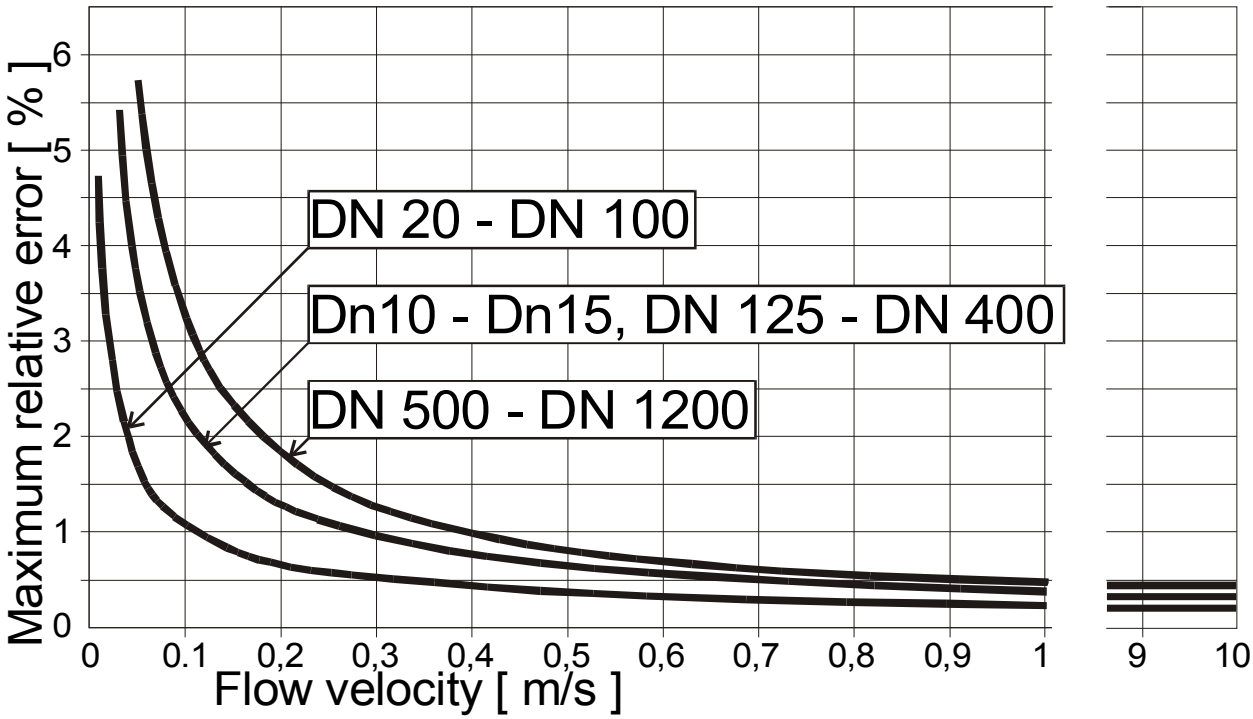

Fig. 3: Maximum error curve of the measuring device.

OPERATION AND INSTALLATION CONDITIONS

Sensor Location in a Pipeline

The best performace of the flow meter can be achieved when flow is stable. For this reason, a few rules must be kept for its location in the pipeline. There must be no inner transition edges between the sensor and the rest of pipeline causing turbulence. It is necessary to keep minimum straight stabilizing lengths of the pipeline, length of which is proportional to the pipeline inner diameter.

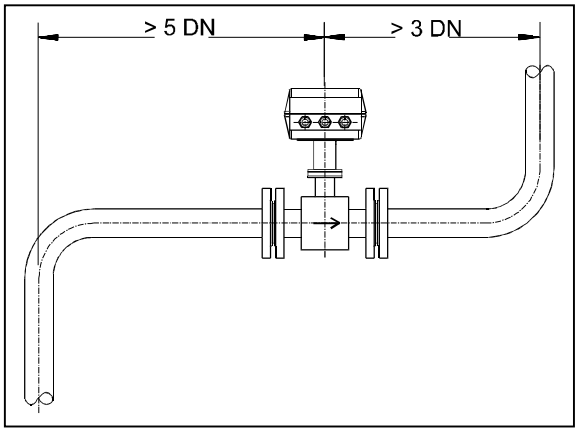

Fig. 4: Stabilizing lengths of pipeline

If more disturbing influences are present near to sensor (elbows, fittings), you must multiply the required stabilizing length by the number of these disturbing elements.

Reductions with inclination up to 8° can be included in the stabilizing length.

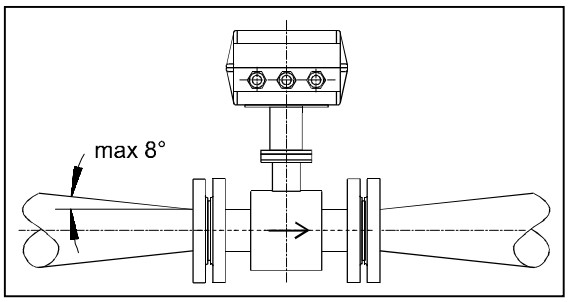

Fig. 5: Reduction.

In case that water in the pipeline is pumped with a pump, the sensor must be located behind the pump to avoid vacuum effects that can damage the sensor. The stabilizing length 25 DN must be kept between the pump and the sensor.

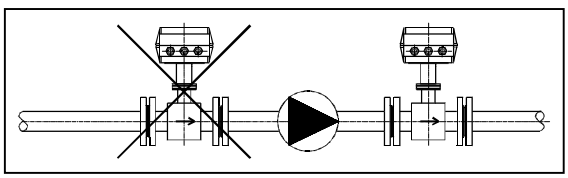

Fig. 6: Pump location

For the same reason, shut-off valves must be always located behind the sensor.

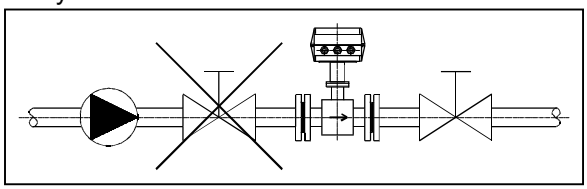

Fig. 7: Shut-off valves.

The sensor can work both in horizontal and vertical positions, however always ensure that the axis of measuring electrodes remains in horizontal position and that the chimney of the sensor is in upright position.

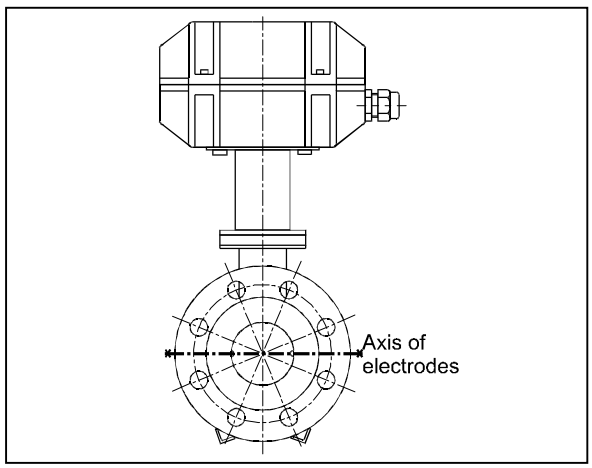

Fig. 8: Axis of electrodes.

In case the sensor is positioned vertically, fluid can flow only in upward direction.

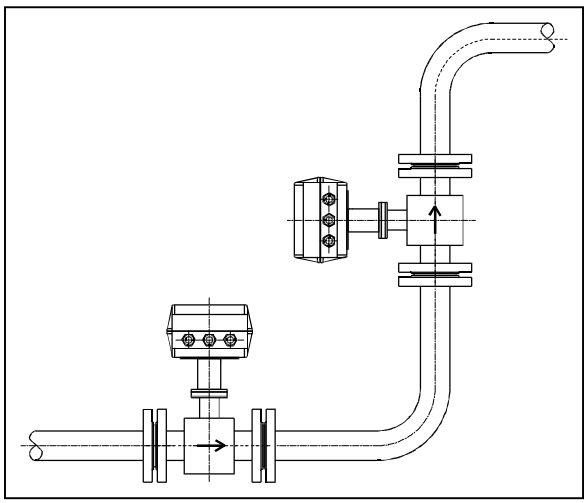

Fig. 9: Vertical position of the sensor.

For correct measurement always ensure that the whole cross-section of he sensor is filled and that it does not become aerated. So never position the sensor in an upper pocket nor in vertical position when fluid flows downwards.

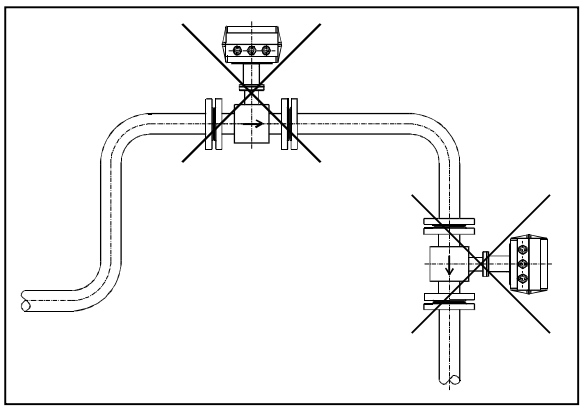

Fig. 10: Danger of aeration.

If it is not possible to ensure permanent flood of the whole cross-section of the pipeline, you can locate the sensor in a lower pocket so that it is always flooded.

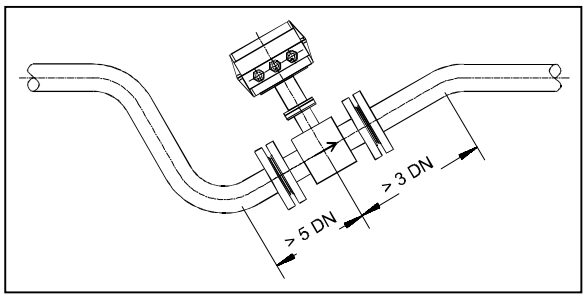

Fig. 11: Permanent flood

A free discharge must be located 2DN higher than the sensor.

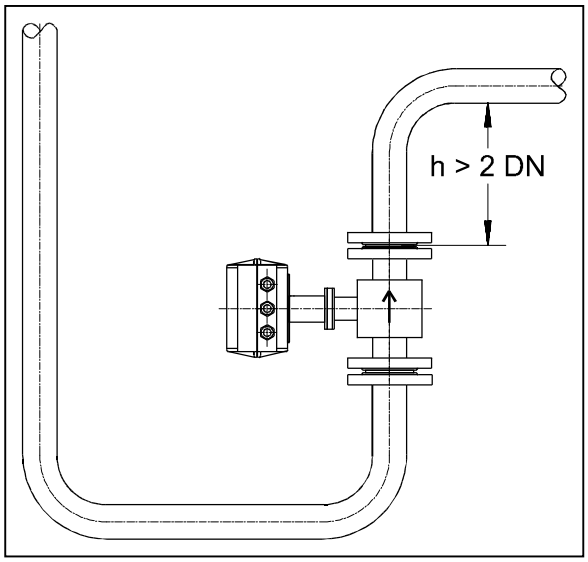

Fig. 12: Free discharge.

Ensure that the attached pipeline is always supported as near to the sensor as possible, and that there are no vibrations that can damage the sensor.

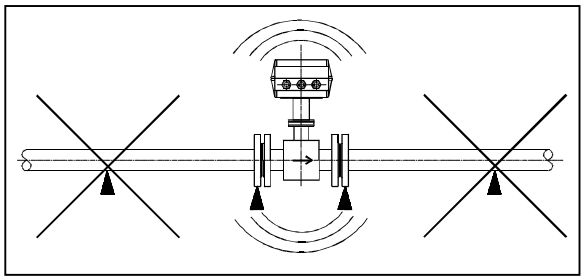

Fig. 13: Danger of vibrations.

A bypass must be installed where it is necessary to ensure uninterrupted flow of medium and it is not possible to remove the sensor for service purposes. The same applies for cases where too long section of the pipeline must be drained if the sensor is to be removed.

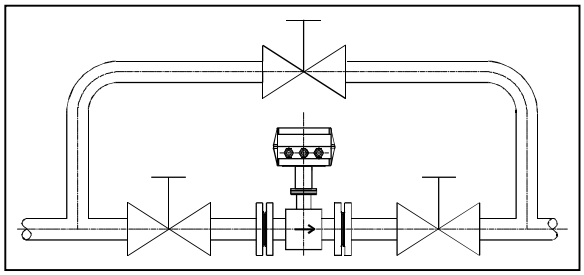

Fig. 14: Bypass.

Sensor Grounding

For correct operation of the induction flow meter it is necessary to ensure perfect electric contact between the sensor and the attached pipeline, ground potential and power supply protection wire.

For flanged sensor attached to conductive pipeline it is necessary to ensure electric contact between flanges and to ground the pipeline.

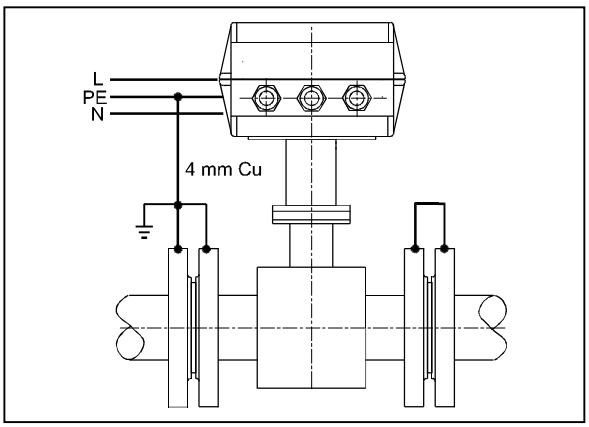

Fig. 15: Flange grounding.

If the attached pipeline is not conductive, it is necessary to insert grounding rings in the pipeline or to ensure connection of the

measured medium electric potential with ground potential in a similar way.

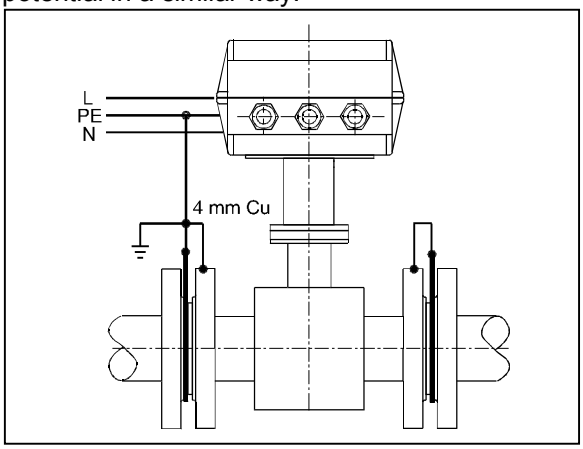

Fig. 16: Grounding rings.

For flangeless sensors, connect electrically flanges holding the sensor, and connect them with the sensor grounding point.

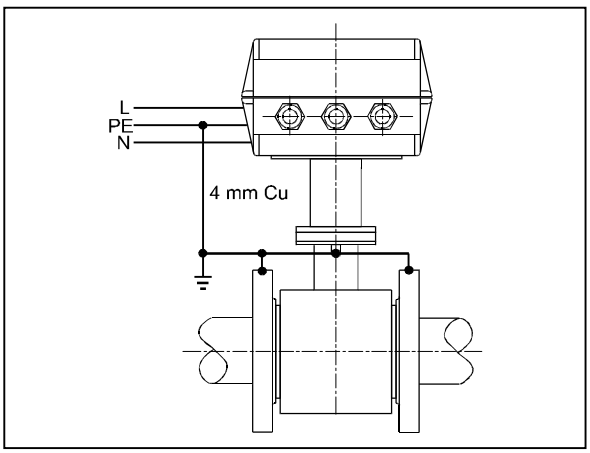

Fig. 17: Flangeless sensor.

If electric current flows through the pipeline, e.g. in case of cathodic anticorrosive protection, it is necessary to isolate electrically the sensor from the attached pipeline and to supply the power to electronics via an isolation transformer.

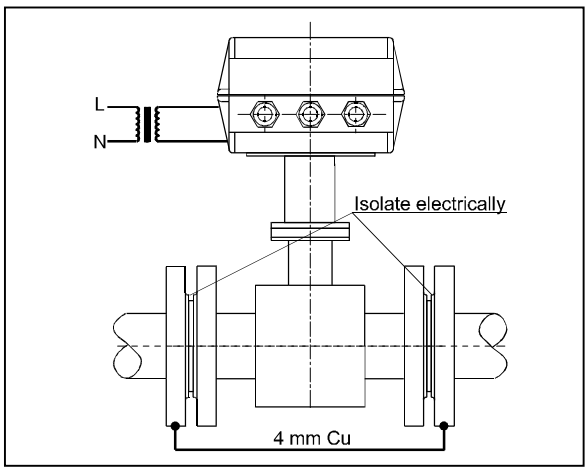

Fig.18: Cathodic protection.

Terminals

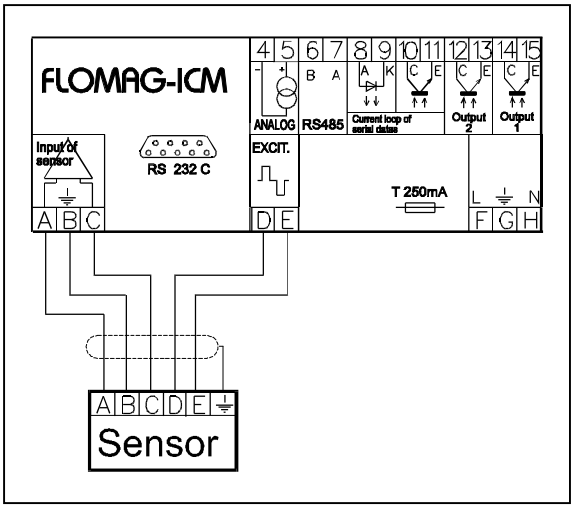

Fig.19 Diagram of terminals

4	Current	- pole
5	Output	+ pole
6	RS 485	wire B (-)
7	(Option)	wire A (+)
8	Comm.	Anode (receiver)
9	Interface	Cathode (receiver)
10	20mA Curr.	Collector (transmitter)
11	Loops	Emitter (transmitter)
12	Binary	Optoelement Collector (+)
13	Output 2	Optoelement Emitter (-)
14	Binary	Optoelement Collector (+)
15	Output 1	Optoelement Emitter (-)

Connection of the converter and the sensor

	Cable w/o connectors	**Cable with connectors**	**Compact**
A	Electrode 1	Connected with supplied cable (not connected to terminals)	Connected internally (not connected to terminals)
B	Ground		
C	Electrode 2		
D	Excitation 1		
E	Excitation 2		

Power Supply

	230V / 50 Hz	**24V / DC**
F	L - phase	+24V
G	PE - ground	ground
H	N - zero	0V

Table 1: Terminal description

For compact versions the sensor is internally connected with the converter while for detached versions they are interconnected using a supplied cable with connectors. (Older version of sensor is connected using two cables, excitation using two-wire unshielded cable and electrodes using three-wire shielded cable; the corresponding terminals of the sensor and the converter are always connected.)

For detached versions it is recommended to install the converter near to the sensor so that the maximum length of connection cables between the flow meter units will not exceed 25 m. If the flow meter is used in environment with strong electromagnetic interference, it is recommended to use cables as short as possible. Conductivity of the measured medium also has a significant influence on maximum length of the cable.

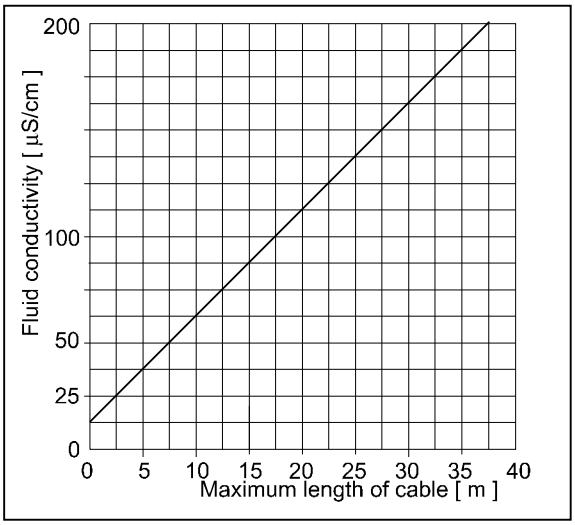

Fig. 20: Maximum length of cable

Any signal cable of a usual type with any number of wires can be used for interconnection of the converter output terminals with another device.

We recommend using of standard three-wire power cord for connecting the instrument to mains. The instrument does not incorporate its own switch and hence it must be protected and switched on and off using another device.

In locations with strong electromagnetic interference (e.g. near frequency converters, etc.), we recommend to place a network filter before the device.

Avoid parallel running of power wires with signal wires, especially with connecting cable between the sensor and the separate converter.

Choice of Suitable Sensor Lining

Sensors are manufactured with lining of various materials and its choice depends on parameters of the measured fluid.

Technical Rubber

Can be used for low agressive fluids with working temperature 0÷70 ºC. It is suitable for most applications in water-supply industry and waste water purifying. It is manufactured in two versions **TG -** with hard texture and **MG** - with soft texture. The soft texture can be chosen for fluids with higher content of abrasive particles (sand).

Resistive Rubber

NG - can be used for medium agressive fluids with working temperature 0÷90 ºC. It is suitable for measurement of hot service water, condensate, etc. If temperature can rise above 100 ºC, teflon lining is preferred.

Teflon

T – the lining with most general use for agressive fluids with working temperature –20÷150 ºC. It is suitable for applications in chamical and food industry.

** Note – We can suggest the lining material best suitable for your particular purposes.*

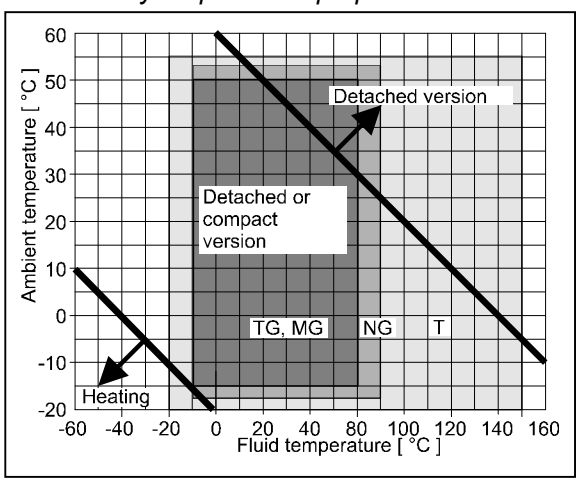

Fig.21: Choice of lining and sensor version

The table above shows suitable lining and sensor version with respect to fluid temperature and temperature near to the electronic unit.

Choice of Electrode Material

Standard material of measuring electrodes is stainless steel 17248. However, material of higher quality must be used for some special applications. Platinum or Hastelloy C4 electrodes can be supplied on request.

** Note – We can suggest the electrode material best suitable for your particular purposes.*

Working Pressure of Measured Fluid

Standard sensors are manufactured for nominal pressure PN16 (1.6 MPa) for dimensions DN15 to DN150 and PN10 (1.0 MPa) for dimensions DN200 to DN1200. We can supply sensors for PN6 (0.6 MPa) to PN40 (4.0 MPa) on request. The choice of nominal pressure depends mainly on maximum working pressure of the fluid and/or on flange size of the attached pipeline. Temperature of the measured fluid must be also considered.

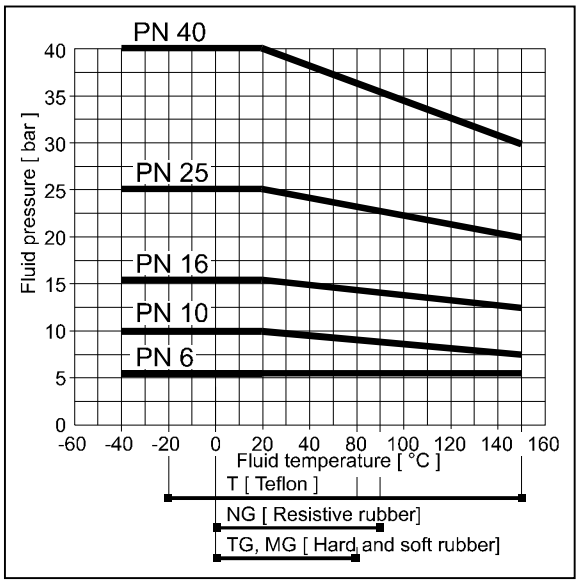

Fig.22: Working pressure

Sensor Size Selection

Table 2 shows minimum and maximum ranges of individual sensor sizes for flow rates 0.1÷10 m/s. Working range of flow rates is chosen preferrably in range 0.5÷5 m/s. Measurement error increases for lower flow rates (see Fig.3). Higher flow rates often cause disturbing turbulence on transition edges.

Installation and Start of Operation

Under conditions mentioned above, the flow meter FLOMAG-ICM is ready for immediate use after it is installed in the pipeline and power supply is connected. Connecting screws of the electronic box must be secured and bushings sealed after wires are connected to terminals. Free bushings must be blanked.

Fig.23: Diagram for sensor size selection

DN	l / s		m^3 / h	
	Qmin	Qmax	Qmin	Qmax
10	0,008	0,8	0,028	2,8
15	0,018	1,8	0,065	6,5
20	0,032	3,2	0,12	12
25	0,05	5	0,18	18
32	0,08	8	0,30	30
40	0,125	12,5	0,45	45
50	0,2	20	0,72	72
65	0,32	32	1,2	120
80	0,5	50	1,8	180
100	0,8	80	2,8	280
125	1,2	120	4,3	430
150	1,8	180	6,5	650
200	3,2	320	11,5	1150
250	5	500	18	1800
300	7	700	25,2	2520
350	9,6	960	35	3500
400	12,5	1250	45	4500
500	20	2000	72	7200
600	28	2800	100	10000
700	38,5	3850	140	14000
800	50	5000	230	23000
900	63,5	6350	230	23000
1000	78,5	7850	280	28000
1200	113	11300	400	40000

Table 2: Sensor ranges

If the flow meter is designed as a rated measuring device, it must be secured with installation seals in accordance with the type test TCM142/98-2805. Its copy will be sent to you on request. Rated measuring devices can be installed only by authorized organizations.

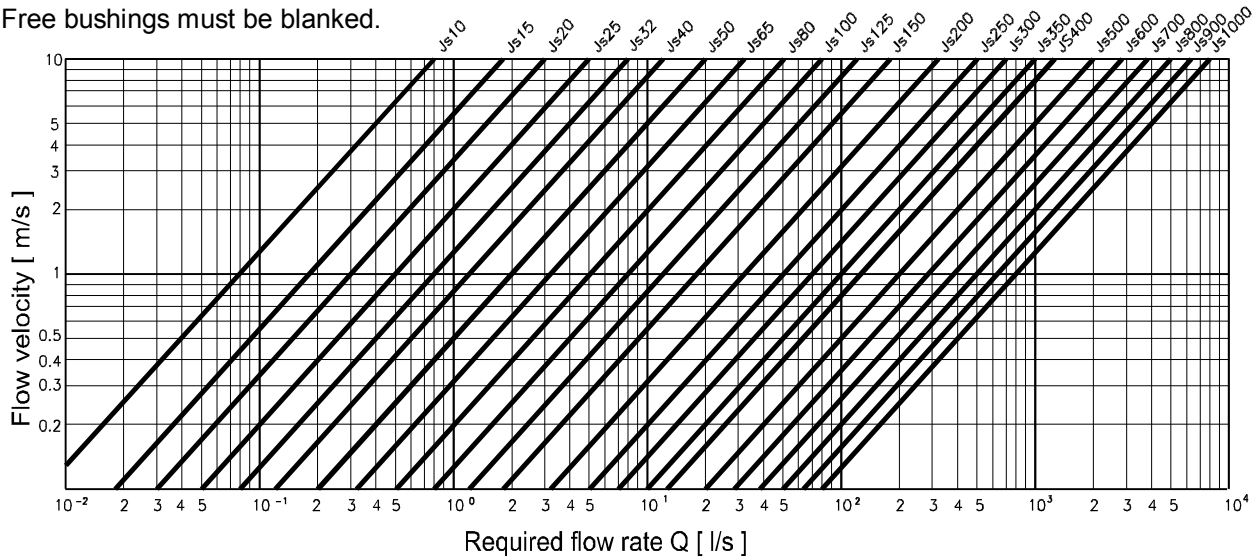

DISPLAYED INFORMATION

Operational Data

The device is equipped with a high-quality two-line backlit alphanumerical display with character height 9.6 mm (2 x 16 characters) easily readable even from greater distance. Backlit function works in a power saving mode. The duration of illumination is limited to 250 seconds after the last pressing of any key. If the illumination is switched off, the first pressing of any key switches it on again.

Up to eight different readings can be sequentially displayed on the converter. Switching of readings is carried out using the key 1 . Flow rate units can be arbitrarily changed.

Number of *decimal places* can be set in range 0 - 3.

MENU: *Data Displayed / Decimal Places / Decimal Places*

You can suppress displaying of unnecessary information and shorten the display cycle in this way. All numerical values are updated each 0.5 sec.

1) Current Flow Rate

- Flow rate value at the moment of transmitting one excitation pulse and receiving the response - sample. Tacting cycle is 12.5 times per second for excitation frequency 6.25 Hz and 6.25 times per second for excitation frequency 3.125 Hz.

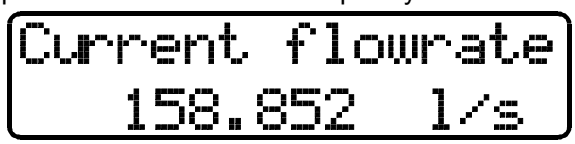

Fig. 24 Display - current flow rate

2) Average Flow Rate

- Flow rate values processed by floating averaging.

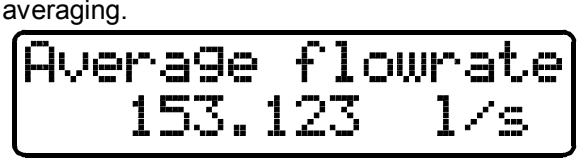

Fig. 25 Display - average flow rate

Number of samples „N“ for calculation of average value can be arbitrarily set in range 1..255.

With respect to the *sampling frequency* 12.5 Hz (6.25 Hz) the sudden changes of the flow rate are distributed in interval from 0 to 20.32 sec (0 to 40.64 sec).

This function can be used e.g. in case when the flow in the sensor is unsteady and medium swirls or when bubbles are generated.

Averaging removes value drifting at abrupt changes of the flow rate. The averaged value controls *analogue* and/or *frequency output* .

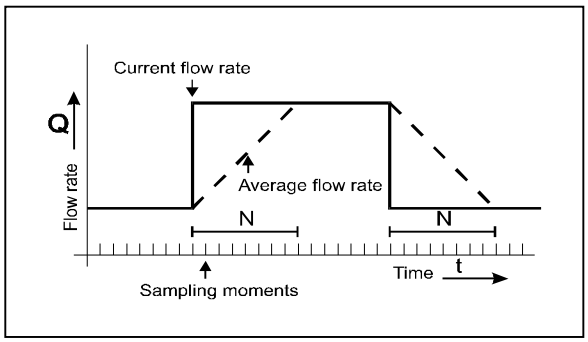

Fig.26: Averaging

3) Total Volume (+)

- Total volume of the fluid flowed in direction of the arrow on the sensor from the start of measurement.

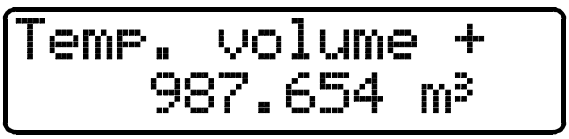

Fig.27a,b: Display - flowed volume positive

4) Total volume (-)

- Total volume of the fluid flowed against direction of the arrow on the sensor from the start of measurement.

Fig.28a,b: Display – flowed volume negative

5) Volume difference

- The difference between the positive and negative volumes flowed from the start of measurement.

```
Total difference
    4426.465 m³
```

```
Temp. difference
      26.785 m³
```

Fig.29a,b: Display – volume difference

6) Operation time

- The total time of operation from the first instrument switch-on in hours and minutes.

```
Operational time
  45678:05 h:m
```

```
Temporary time
  12548:45 h:m
```

Fig.30a,b: Display – operation time

Values of items 3, 4, 5 and 6 are stored after switch-off in EEPROM memory for almost unlimited time and they are always retrieved after the flow meter is switched on. The used method of data backup does not require any power supply for the memory.
User is not allowed to reset items 3, 4, 5 and 6. However, resettable (temporary) counters associated with items 3, 4, 5 and 6 are available for this purpose and they can be accessed via key 2 . You can reset these temporary counters either by selection from menu or by simultaneous pressing the keys 3 and 4 when their values are displayed. This will cause simultaneous reset of all temporary counters.

Menu: *Data Displayed / Reset Counters / Yes*

7) Percentual Flow Rate

- flow rate reading indicated by a horizontal bar (its width corresponds to the flow rate) and by a numerical value in per cents of the chosen maximum

Menu: Data Displayed / 100 Per Cent / 100 Per Cent

```
Percent.flowrate
▐▐▐▐▌_____ - 45%
```

Fig.31: Display – percentual flow rate

8) Last Error

- The abbreviated text of the last error message.

```
Last error
0: No error
```

```
Last errors
E-07 001/005
```

Fig.32a,b: Display – last error

The device enables to review also codes of previously indicated error messages (up to 255 previous messages). You can access this mode from the last error display via the key 2 . In the displayed code E-XX YYY/ZZZ, XX indicates the error code, YYY indicates the order, where 001 stands for the latest error code and all higher numbers represent previous messages. ZZZ indicates the total number of stored codes. You can use the key 3 to scroll them.

User's Service

Error Messages

If an error occurs, an error message with a short description is displayed immediately on the display of the flow meter.
For instance:

After the key 1 is depressed, the flow meter returns back to the data display mode and the abbreviated error message is stored into the last error register and the error code into the storage. At the time when the error is indicated, the flow meter continues in measurement. For errors E-7 and E-13, zero flow rate is indicated for the time of error duration unless the corresponding error message is set to mode „disabled".
The most usual error messages are:
E1: The data checksum in the EEPROM memory is not correct. This error occurs when the processor does not succeed in storing all data into EEPROM memory at power failure. However, the stored data are sufficiently protected so that it is almost always possible to continue with measurement.
E2: Multifunctional output 1 works as a pulse output and the memory of still untransmitted pulses has overflowed.
E3: Multifunctional output 2 works as a pulse output and the memory of still untransmitted pulses has overflowed.
E4: The flow meter is synchronized with the network frequency (50 Hz) and this message informs you that one pulse is missing. For

versions 24V/DC it means drop of the supplied voltage. In case of longer duration of the error, the flow meter stores data in the EEPROM memory and resets.
E5: The processor was reset due to overflow of the timer watching the length of a program loop.
E6: The processor was reset due to processor oscillator dropout.
E7: The current loop of the sensor pulse excitation is open.
Error messages E-8 to E-10 inform user of problems with power supply for electronics.
E11: Actual flow rate exceeded the value set for I_{max}.
E12: Receipt of the frame for serial link communication was not confirmed.
E13: Indicates considerable asymmetry of the sensor signal with respect to electrical ground. This can be caused by absence of the fluid in the sensor, great bubbles in the fluid, incorrect sensor grounding or by interruption of the signal wire.
The way of displaying error messages can be set in three stages for each error.

Menu: *Data Displayed / Error Messages / EXX /*

Enabled + message
Do not display
Disabled

Enabled + message: Displays the error and indicates it on the output (if some of the outputs is in error indication mode). Resets the flow rate to zero for errors E7 and E13.
Do not display: The error is not displayed but it is indicated on the output (if some of the outputs is in error indication mode). Resets the flow rate to zero for errors E7 and E13.
Disabled: The error is neither displayed nor indicated on outputs. The flow rate is not reset to zero. However, the error code is stored in memory and displayed in the last error display mode.

Flow Rate Units

Flow meter software enables to change units of the flow rate. Twelve most commonly used units are pre-programmed and user can arbitrarily define the thirteenth unit.

Menu: *Flow Rate Units /*

l/sec
l/min
l/hr
hl/sec
hl/min
hl/hr
m^3/sec
m^3/min
m^3/hr
ml/sec
ml/min
ml/hr
User's

User defined units are determined by a conversion constant - multiplicator that indicates how many times the required unit differs from the flow rate in l/sec. The name of the unit is a text of maximum length of 6 characters. The characters can be upper case, lower case or special symbols (slash, index, etc…).
Units should be selected with respect to measured flow rates to avoid display overflow (maximum 9 characters) or display underflow (maximum 3 decimal places are displayed).

Suppression of Imaginary Flow Rate

The user can enter a *minimum flow rate* for start of the flow meter operation.

Menu: *Production Data / Minimum Flow Rate / Do not meas. Q<*

This function is very useful e.g. in plants with strong interference where the instrument indicates a certain minimum flow rate even when there is no doubt that the medium does not flow through the pipeline. If the current value of the flow rate is lower than the entered minimum value (entered directly in l/sec.), the flow meter shows zero flow rate. Entering the minimum flow rate extends the zero region in both directions by the same value. It is advisable to adjust the minimum flow rate according the Q_{min} value on the sensor type plate.

USER'S OUTPUTS

Analogue Output

Settings

A programmable current output is available on terminals 4 and 5. The output is enabled (forced current) and galvanically isolated from other parts of the flow meter. It can work into the maximum load of 1000 Ω.
The output can work in four modes depending on the flow rate (see graphs) and in four selectable ranges.

Menu: *Analogue Output /*

Output for 0..+Q
Output for 0..-Q
Output for IQI
Output for -Q..+Q
Fixed current 0..20

A range can be selected for all modes except for fixed current mode.

Menu: *Analogue Output / 0..+Q Output /*

Output 0..20mA
Output 4..20mA
Output 0..10mA
Output 0..5mA

Setting of the current output is performed by selection of Q_{max} flow rate for the current upper limit I_{max}.

Menu: *Analogue Output / 0..+Q Output / 0..20mA / Imax Flow Rate*

In the fixed current mode the current is set directly in mA.

Menu: *Analogue Output / Fixed Current / Constant Current*

Following graphs show the dependence of the output current I on the flow rate Q for various modes of operation:

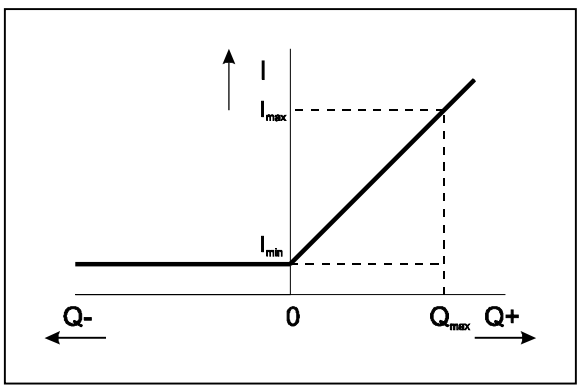

Fig.33: Current for 0..+Q

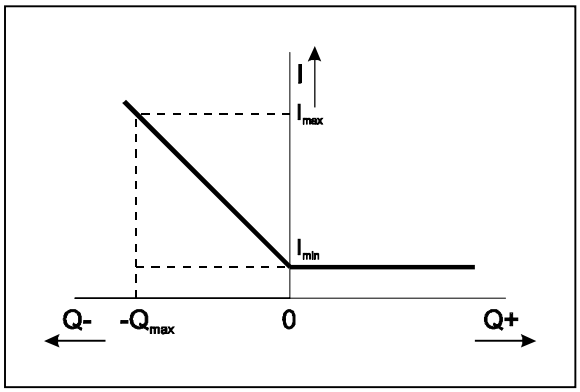

Fig.34: Current for 0..-Q

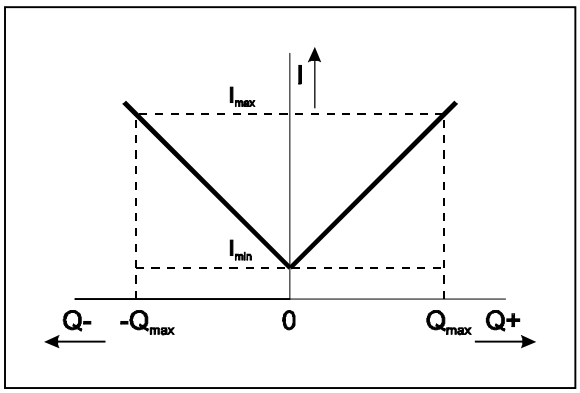

Fig.35: Current for |Q|

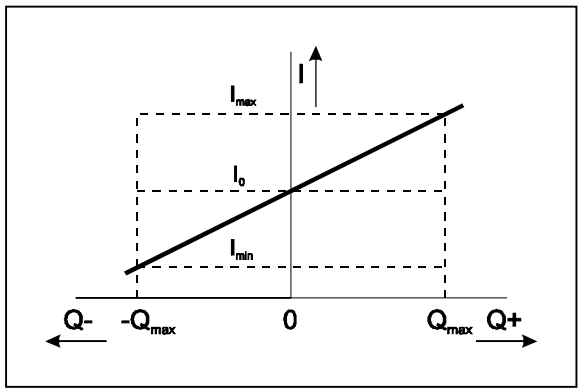

Fig.36: Current for –Q..+Q

	0..20mA			4..20mA			0..10mA			0..5mA		
Flow rate/current	$-Q_{max}$	0	Q_{max}	$-Q_{max}$	0	Q_{max}	$-Q_{max}$	0	Q_{max}	$-Q_{max}$	0	Q_{max}
Output for 0..+Q	0	0	20	4	4	20	0	0	10	0	0	5
Output for 0..-Q	20	0	0	20	4	4	10	0	0	5	0	0
Output for 0..IQI	20	0	20	20	4	20	10	0	10	5	0	5
Output for -Q..+Q	0	10	20	4	12	20	0	5	10	0	2,5	5

Table 3: Current Output Functions

Analogue Output Connections

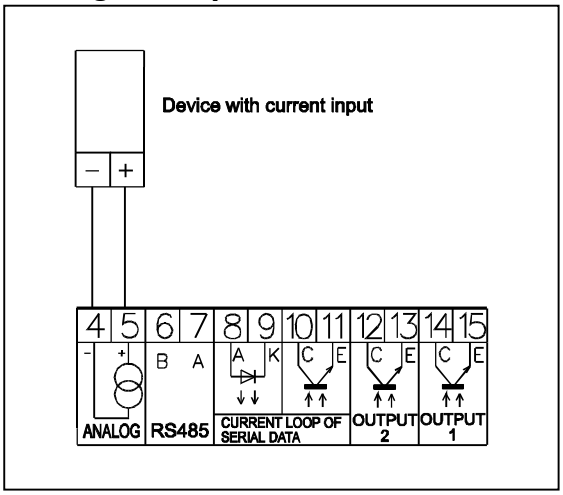

Fig.37: Basic connection for the flow meter with current input

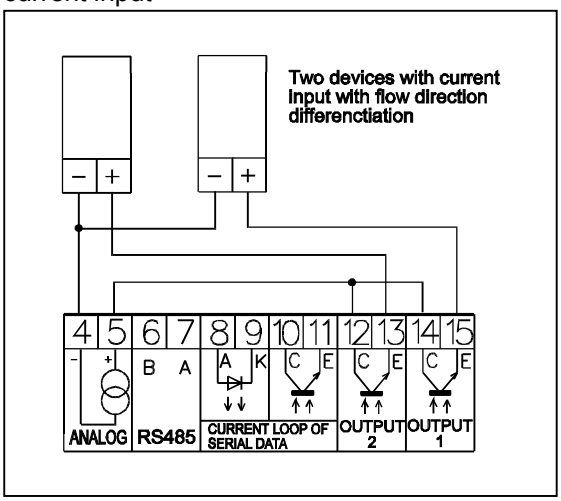

Fig.38: Connection for flow direction differentiation.

Multifunctional outputs programmed for flow direction differentiation and flow direction negation will split the analogue output working in function of absolute value output into two separate outputs for either flow direction.

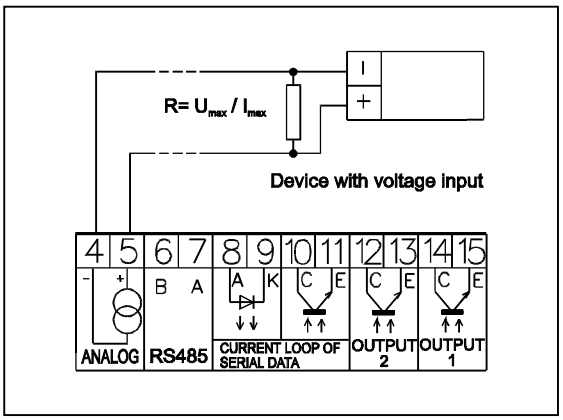

Fig.39: Basic connection for the flow meter with voltage input

Output voltage corresponds with the voltage drop on the resistor.

It applies that **U = I * R** .

E.g. for the range 0..10V we select R = 500 Ohm and analogue output range 0..20 mA. The conversion resistor must be situated as near as possible to input terminals of the controlled device. The maximum recommended range of voltage on the resistor is 10 V. The input resistance value of the controlled device terminals must be significantly higher than the value of the resistor.

Analogue Output Specifications

12-bit D/A converter controls the analogue output. The range 0..20 mA is divided to 4096 steps. One step (1LSB) thus represents approximately 0.005 mA (0.04% of 20 mA). This resolution is the same for all ranges. Other ranges than 0..20 mA are software generated by reduction of number of steps of the converter.
Maximum output voltage of the current output is 20V and so it can work into the maximum loop resistance of 1000 Ω.

Multifunctional Binary Outputs

The table shows functions that outputs can acquire.

Permanently open Perm. closed
IQI pulses IQI not pulses Q+ pulses Q+ not pulses Q- pulses Q- not pulses
Q+ frequency Q- frequency IQI frequency Fixed frequency
Negative flow Non-neg. flow
Error occured No error occured
Q>Qlim. Q>Qlim. not Q<Qlim Q<Qlim. not IQI>Qlim. IQI>Qlim. not IQI<Qlim. IQI<Qlim. not
Cleaning Not cleaning

The electronic converter is equipped with two binary multifunctional outputs isolated by an

optoelement. Output transistors of optoelements are available on terminals 12-13 and 14-15. The outputs are passive and require an external power supply for operation (the analogue output in mode of fixed current output can be used). Outputs can switch permanent current 1..50 mA or pulse current up to 1 A (max. 0.2 sec.) with pulse/pause ratio 1/20.

Permanently closed / open

These modes are designed for service purposes.

Menu: *Output Function / Output 1 (2) Function / Permanently closed (open)*

Pulse outputs (not)

In this mode, a pulse is generated immediately after the preselected volume has flowed through. Pulse generation is determined by three parameters: pulse length „t_U“, minimum pause between two pulses „t_D“ and volume per 1 pulse „**V“.**

Flow rate values are integrated in time. Immediately after the volume V preselected for 1 pulse has flowed through, a pulse of length t_U is generated. A pause of minimum length t_D follows after the pulse. In case that the preselected volume has not flowed through before the end of the pause, the output remains in disabled state, otherwise the next pulse and pause are generated immediately. If the preselected volume flows through before the end of the previous pulse, the untransmitted pulse is stored into a storage of maximum capacity 255 pulses. If the storage overflows, an error message is generated. It follows from above stated information that the parameters of the pulse output must be chosen so that the supposed rate of pulses cannot exceed the limit rate determined by the pulse and pause length.

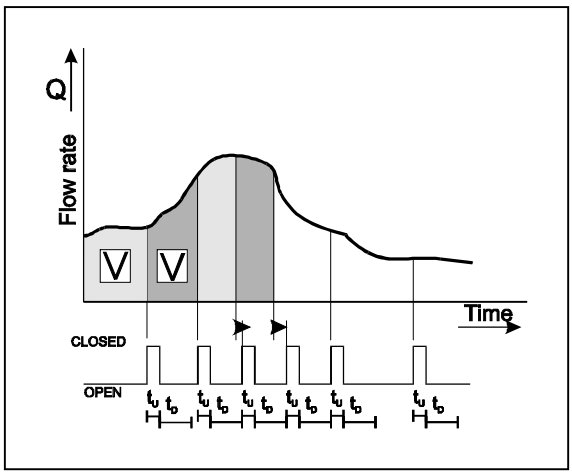

Fig.40: Pulse generation

It applies: maximum pulse frequency [s^{-1}] = 1 / (t_U + t_D)

The volume for 1 pulse can be selected in range from 1 to 10^9 ml (with 1 ml step), i.e. from 1 ml to 1000 m^3. The pulse and pause length can be selected in range from 10 msec to 2550 msec (with 10 msec step). It also follows from the above mentioned that the maximum pulse rate 50 sec^{-1} is possible.

Pulses can be generated in three modes of dependance on flow rate and it is possible to determine pulse polarity (during pulse duration is the output closed (in not modes it is open)).

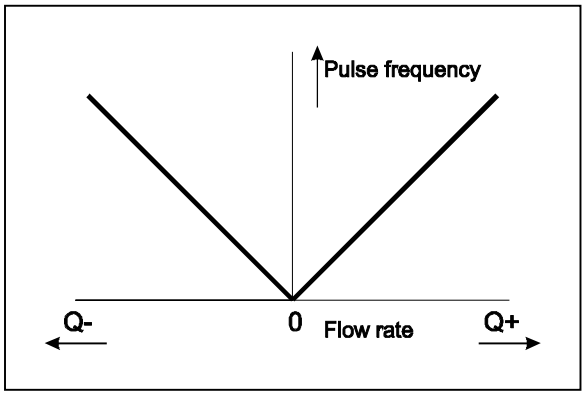

Fig.41: IQI pulses

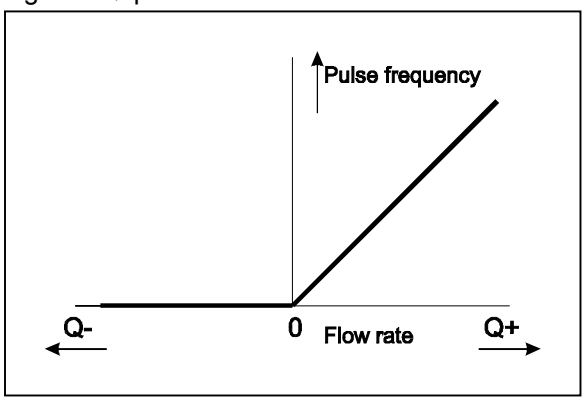

Fig.42: Q+ pulses

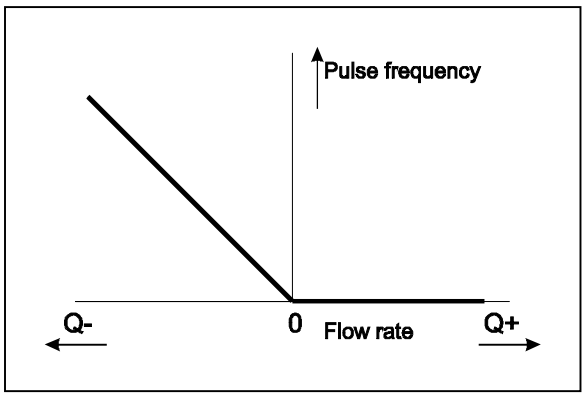

Fig.43: Q- pulses

Menu: *Output Function / Output 1 (2) Function / Q...(not) pulses*

Frequency Outputs

Frequency is generated on outputs in these modes. The pulse/pause ratio is always 1/1. The usable frequency range is 1Hz..10kHz. Caution! Only one frequency generator is available for the converter! For this reason it is not possible to set various frequencies for individual outputs. You cannot combine setting of one output on operation in fixed frequency mode with setting of the other output on operation in mode with frequency dependent on flow rate.

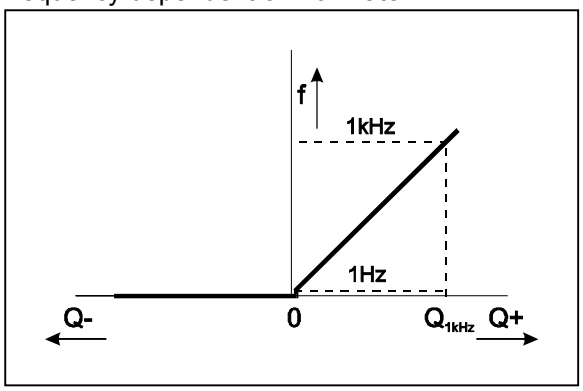

Fig.44: Q+ frequency

It is however possible to generate frequency for positive flow rate on one output, and for negative flow rate with the same dependence flow rate - frequency on the other output.

Frequency outputs can work in three modes of frequency dependence on flow rate.

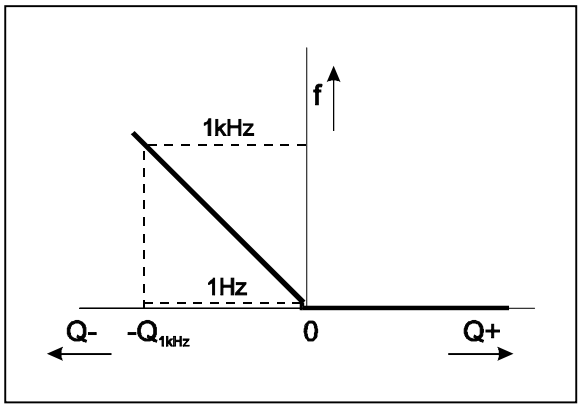

Fig. 45: Q- frequency

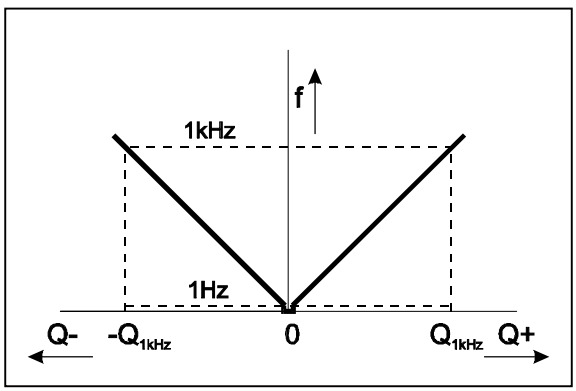

Fig. 46: IQI frequency

Menu: *Output Function / Output 1 (2) Function / Q... Frequency*

The mode with fixed frequency is designed for service purposes, the required frequency is set directly in Hz in range 1..10000Hz.

Menu: *Output Function / Output 1 (2) Function / Fixed Frequency*

Negative / Non-negative Flow Rate

This mode is designed for flow direction differentiation. If the flow rate is negative, the output is closed / open.

Menu: *Output Function / Output 1 (2) Function / Negative / Non-negative flow*

Error / No Error Occured

If an error occurs and its mode is set on enabled (see *Error Messages*), the output closes / opens for minimum duration 5 sec. If the error keeps on, the output is closed / open for the whole time of error duration.

Menu: *Output Function / Output 1 (2) Function / Error (No Error) Occured*

Flow Rate (Not) Higher / Lower than the Limit Value

If the flow rate is higher / lower than the chosen limit value, the output closes (opens). After the flow rate returns to chosen limits, the output opens (closes) with respect to adjusted hystheresis. The function can work in four modes of dependence on flow rate with output polarity differentiation.

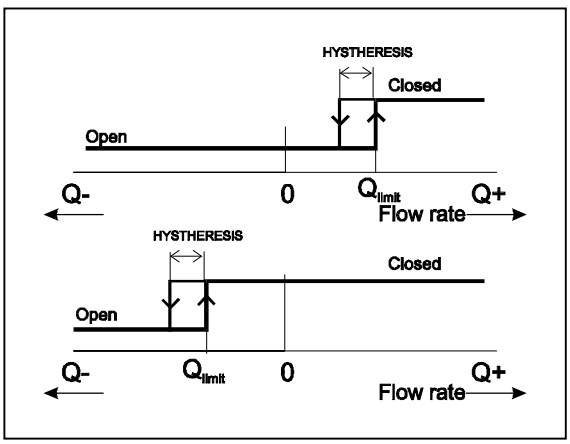

Fig.47: Q > $Q_{lim.}$

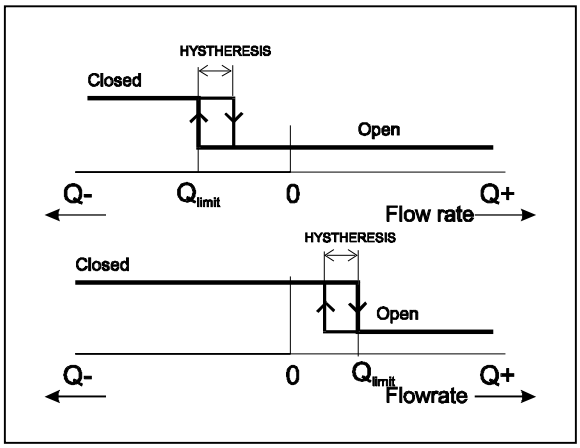

Obr.48: Q < $Q_{lim.}$

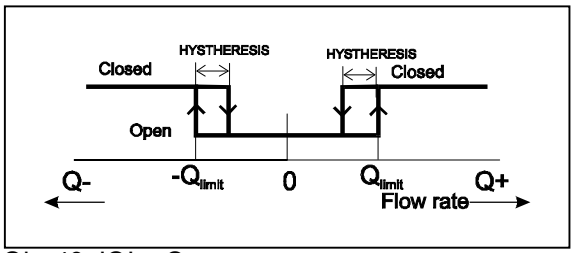

Obr.49: IQI > $Q_{lim.}$

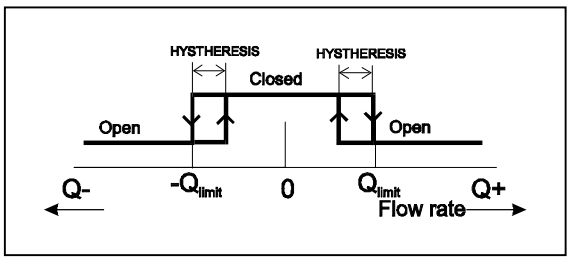

Obr.50: IQI < $Q_{lim.}$

Menu: *Output Function / Output 1 (2) Function / Q > Qlim.*

Electrode Cleaning / Not Cleaning

The output is closed / open during cleaning.

Menu: *Output Function / Output 1 (2) Function / Cleaning (Not Cleaning)*

Communication Interface

The flow meter is equipped with a serial communication interface. This is used for service purposes or also for permanent connection into a smaller communication network to monitor technological processes. The interface can be switched manually or automatically to various output ports. The port RS 232 and the data communication current loop 20 mA are used as a standard. The flow meter can be optionally equipped with a galvanically isolated port RS 485.

Serial Port RS 232

The port has a 9-pin connector (CANONN 9, male). It is connected to a computer using a crossed cable (Lap Link) with complete, incomplete or only 3-wire null modem (usual type of a standard serial cable).
The port RS 232 is not galvanically isolated from other circuits and is intended for service purposes, not for permanent interconnection.

Serial Port of Current Data Loop

It is connected to terminals 8-9 (input) and 10-11 (output). The port is passive and requires an external power supply for operation (the analogue output set in mode FIXED CURRENT can be used for this purpose). It can work either in 4-wire or in 2-wire connection.

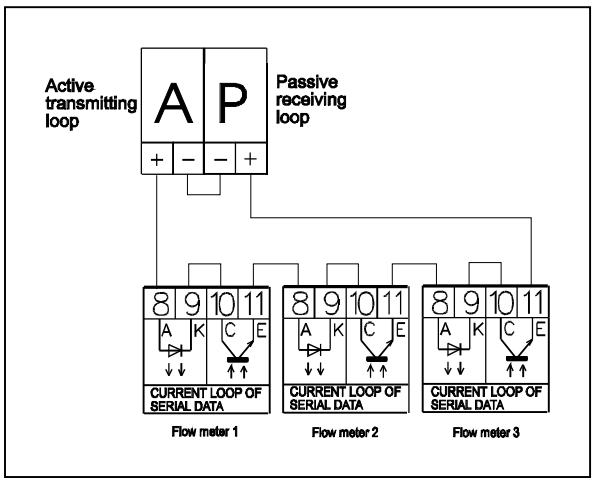

Fig. 51: Connection of current loop stations

Several flow meters can be connected in series using the serial data current loop. Voltage drop of approx. 2.3 V per device must be taken in consideration in such case (drop on a LED of the optoelement and on an output transistor).

Serial Port RS 485

This port can be installed as an option. It is completely galvanically isolated from other parts of the flow meter. It enables connection of up to 31 flow meters to a communication network with a 2-wire twisted cable of total length up to 1200 m. The number of flow meters and the length of the cable can be increased using repeaters.

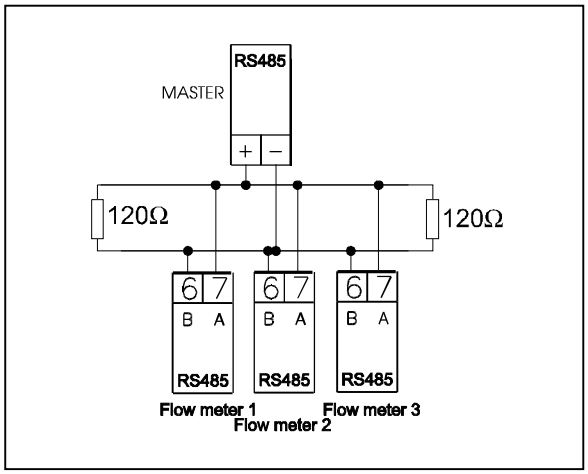

Fig .52: Connection of RS485 stations

Communication

Communication is performed in packets. In case that flow meters operate in a network, each station must have its own address different from others.

Menu: *Serial Line / Own Address / Own Address*

Instruments in the same branch must work with the same baud rate. There are five baud rates you can choose from.

Menu: *Serial Line / RS232 Baud Rate (RS485, Current) /*

2400Bd
4800Bd
9600Bd
19200Bd
38400Bd

Communication runs always only on one port at a time. The device is able to recognize data coming from other than active port and switch the interface to this port. However there is a danger that data of the first packet can be lost. By selection of port priority you can choose which of the ports will be active after the flow meter is switched on.

Menu: *Serial Line / Output Priority /*

RS232 priority
RS485 priority
Current priority

**Communication protocol is not a part of this document and can be obtained from manufacturere on request.*

CLEANING OF ELECTRODES

During the flow meter operation, a non-conductive film on sensing electrodes of the sensor can deposit. This leads to increase of contact resistance between fluid and measured medium and consequently to decrease of measurement accuracy.
The flow meter FLOMAG has a standard function that enables *cleaning of the sensing electrodes* without need of the sensor disassembling. The method uses the electrochemical effect. AC voltage is connected to the electrodes and the deposited film dissolves in fluid. It is recommended to perform this cleaning periodically.

One *cleaning cycle* takes 1 minute. Real measurement is not performed during cleaning. The last flow rate measured before start of cleaning is simulated. The cleaning cycle duration can be indicated on multifunctional outputs. The run of cleaning is indicated on the display by moving full character on its upper line.

The flow meter offers several possibilities how to start the cleaning cycle:

Menu: *Electrode Clean /*

OFF
Only once
During Power ON
Periodically

If you select the ONLY ONCE option, one cleaning cycle is performed immediately after selection and then the flow meter returns to power off mode.

If you select the DURING POWER ON option, the cleaning cycle is performed after each power on. The PERIODICALLY option starts the cleaning cycle in periodic intervals which are user defined in range from 1 to 255 hours. The time countdown starts every time after a time value is entered.

Menu: *Electrode Clean / Periodically / Clean every*

PROGRAMMING

Depending on your needs the converter of the induction flow meter can be configured in two ways: using a computer connected to the serial interface or using keys.

Moving in Menu and Writing to Memory

After the key 4 is depressed, the display is switched to programming mode. The programming mode is protected against unauthorized manipulation by a password. Before opening the main menu you have to enter the correct password (a four-digit number). The password of a new instrument is always 0000.

Fig. 53: Access password

This is also the initial value, which is displayed as default, and you can only confirm this default to open the menu.
The password can be arbitrarily changed before you exit the programming mode.

Caution! You can switch the instrument to the main data displaying mode and check the running process of parameter setting by pressing the key 1 at any time. However, if programming is not completed by selection of the EXIT option, the instrument will not be protected against unauthorized manipulation.
Programming runs in background and with some exceptions has no influence on measurement.

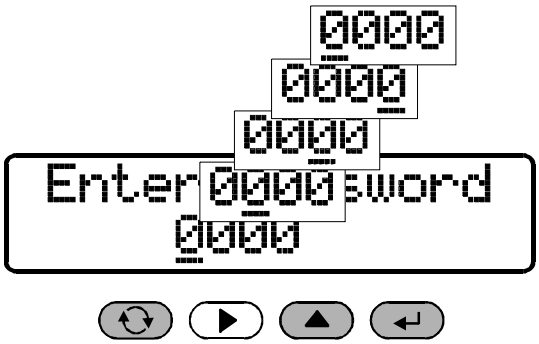

Fig. 54: Cursor movement

The key 2 moves the cursor to the right. After reaching the right margin the cursor returns to the left.

The key 3 changes the character on cursor position. After reaching the last possible character, displaying continues again with the first possible character.
The character set is always chosen with respect to the possibility of character occurrence in text.

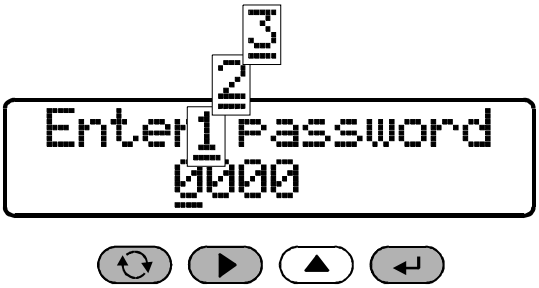

Fig. 53: Entering of numbers

[0..9] for integers, [0..9, - , .] for decimal numbers, the complete alphabet including special characters for text variables.

Fig .55: Selection confirmation

Upon completion of editing confirm your selection by pressing the key 4 .

A status message appears on the display. If your selection is not valid, the programming process returns to editing. After the correct password is entered, you are admitted to the main menu.

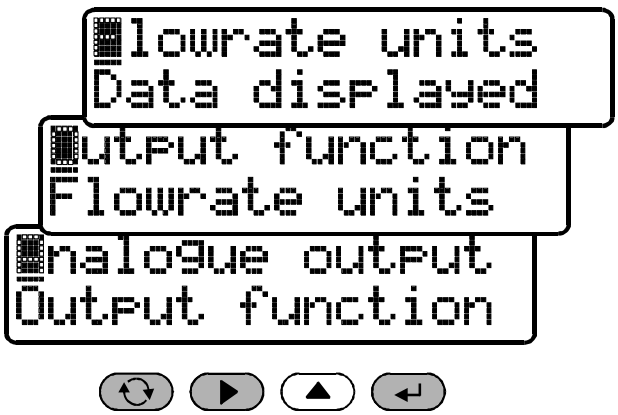

Fig. 56: Moving in menu

You can move in the menu using the key 3 which moves the item displayed on the lower line to the upper line. In all menus always the upper line with the first character blinking is active.

By pressing 4 you can open submenu of the current menu or continue with editing of the item. You can return back to higher menu at any time by pressing 2 („Escape“ function). If you are in the main menu, this selection enables you to exit the programming mode.

Parameter Setting Menu

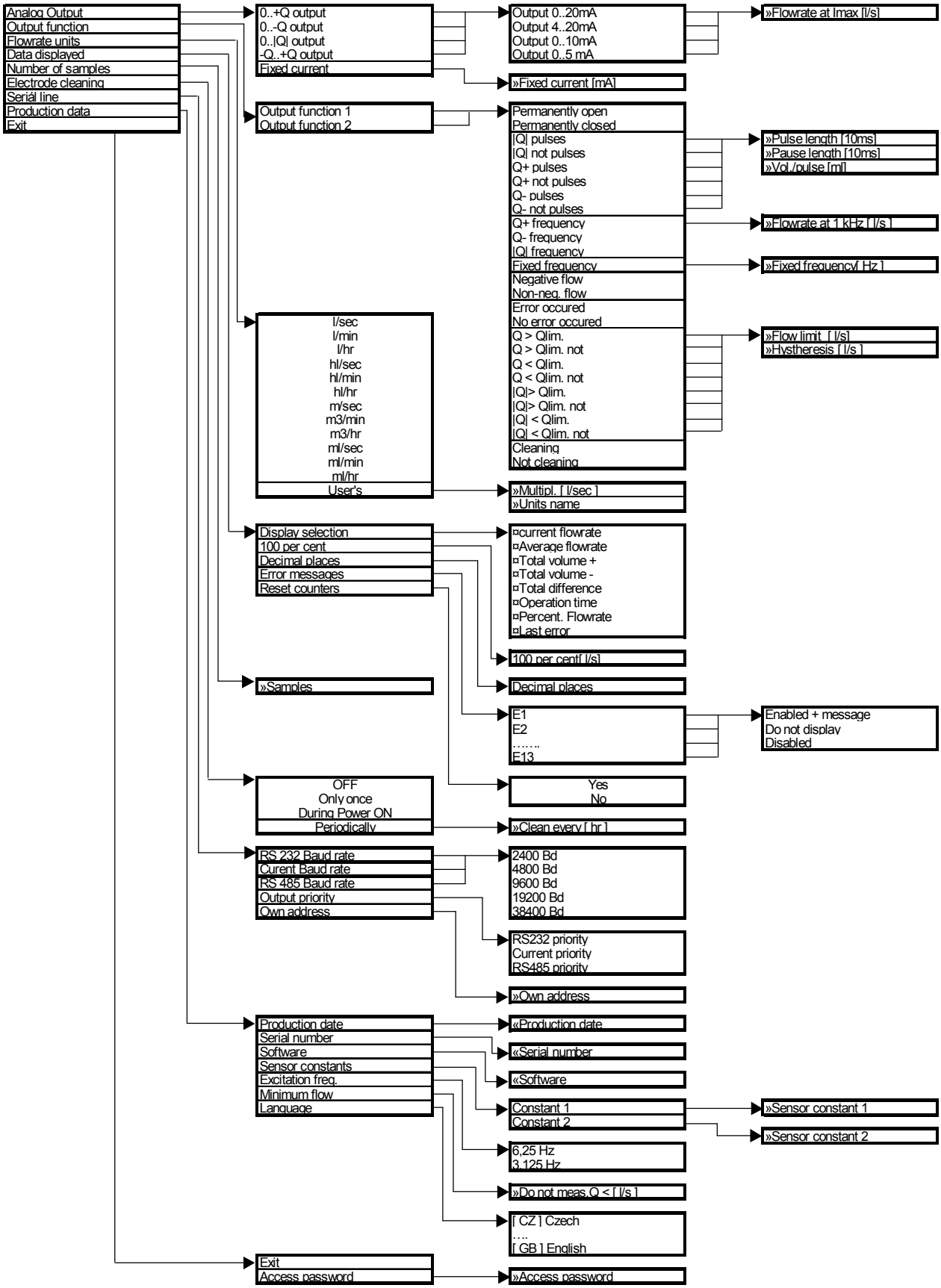

Table 4: Parameter setting menu

CONVERTER SPECIFICATIONS

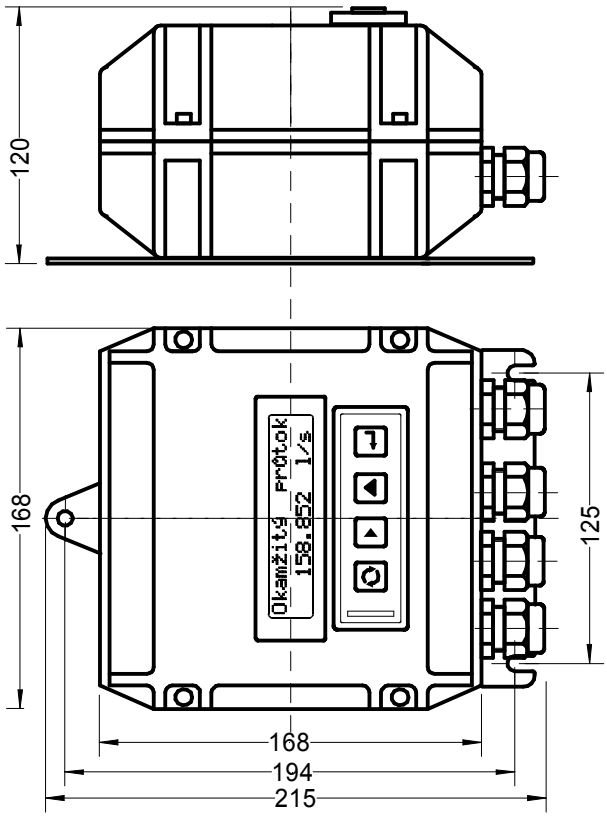

Fig. 57: Detached version

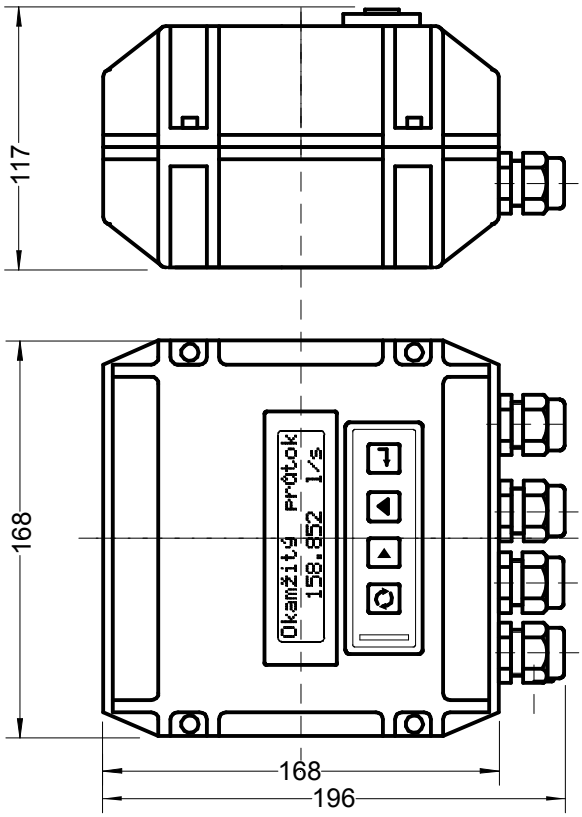

Fig. 58:Compact version

- **Power consumption**: 10 VA
- **Protection**: IP 65
- **Operation temperature**: -5 C to 55 C (protect from direct sunlight)
- **Storage temperature**: -20 C to 80 C (at relative humidity max. 85%)
- **Flow rate range**: 0,1 - 10 m/s
- **Power supply**: 115/230 V~ (+10%-15%)/50 Hz, 24V~,24V=,12V=
- **Measurement error**: less than 0,5% of the measured value in range 5 - 100% Qmax, see Fig. 3
- **Flow rate indication**: - local - two-line backlit alphanumerical display of 2x16 characters, height of character 9.6 mm, switched by an external button (current flow rate in both directions - sign indication of the flow direction, average flow rate in both directions - flow rate value with entered averaging parameter, integrated flow in forward and backward directions - sign differentiation, difference of integrated flows, operational time, bargraph - flow rate indication in %, error messages), selectable flow rate units (12 pre-programmed, 1 user selectable)
- **Outputs** - analogue fully programmable active current output (0/4 - 20 mA, 0 - 5/10 mA, fixed current adjustable up to 20 mA) into load 500 Ohm, 2 digital multifunctional fully programmable outputs, optoelement 30 V/50 mA max. (frequency, pulse, limit report, direction differentiation, status and error messages)
- **Seriál ports** - RS232*, data loop 20mA, (RS485 as an option)
- **Communication language**: CZ, D, PL, GB, I, NL
- **Housing material**: Al
- **Weight**: 3 kg

* Note: All outputs except RS232 are galvanically isolated.

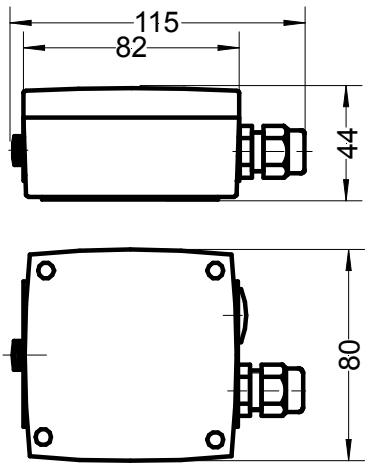

Fig. 59: Terminals enclosure

FLOW RATE SENSOR SPECIFICATIONS

Sensor Dimensions in Flanged Version Applies also for screw version

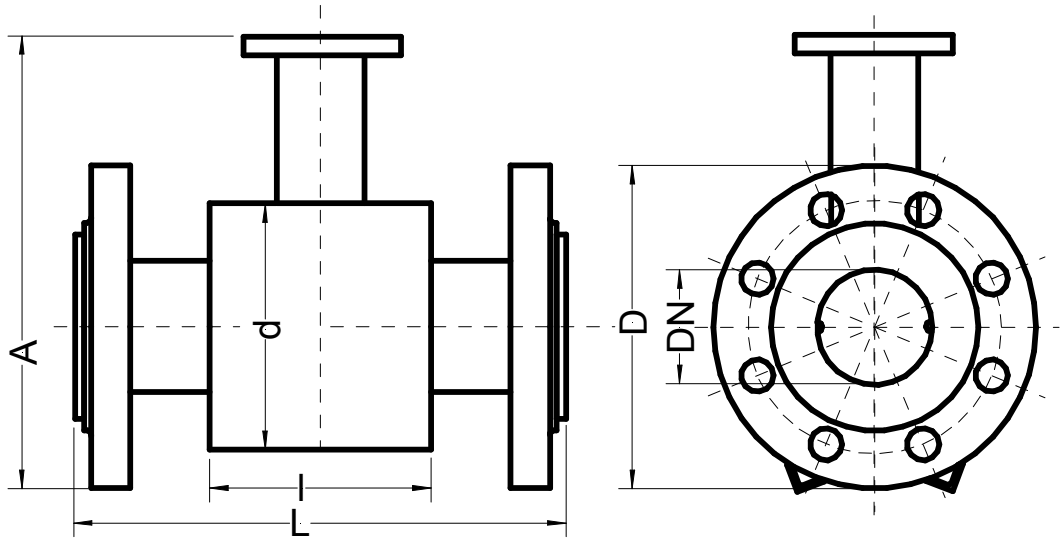

Fig. 60: Dimensions of flanged sensor

DN	D	d	A	L Version TG, MG	L Version T, NG	l	Weight
15	95	62	164	138	134	66	3.5
20	105	62	170	138	134	66	3.5
25	115	74	180	215	211	96	3.5
32	135	84	199	215	211	96	6
40	145	94	209	215	211	96	7
50	160	107	223	215	211	96	8
65	180	127	244	215	211	96	10
80	195	142	260	215	211	96	12
100	215	162	280	215	211	96	16
125	245	192	310	305	301	126	21
150	280	218	340	305	301	126	28
200	335	274	398	380	376	211	35
250	405	370	480	380	376	211	42.5
300	440	420	535	515	511	320	55
350	500	480	584	515	511	320	65
400	565	530	642	515	511	320	94
500	670	640	752	515	511	320	122
600	780	760	870	615	611	320	158
700	895	880	990	715	711	420	230
800	1010	980	1100	815	811	420	325
900	1115	1040	1185	815	811	520	420
1000	1220	1140	1290	1015	1011	520	510
1200	1455	1340	1510	1015	1011	520	680

Table 5: Dimensions of flanged sensor

Dimensions of Flangeless Sensor

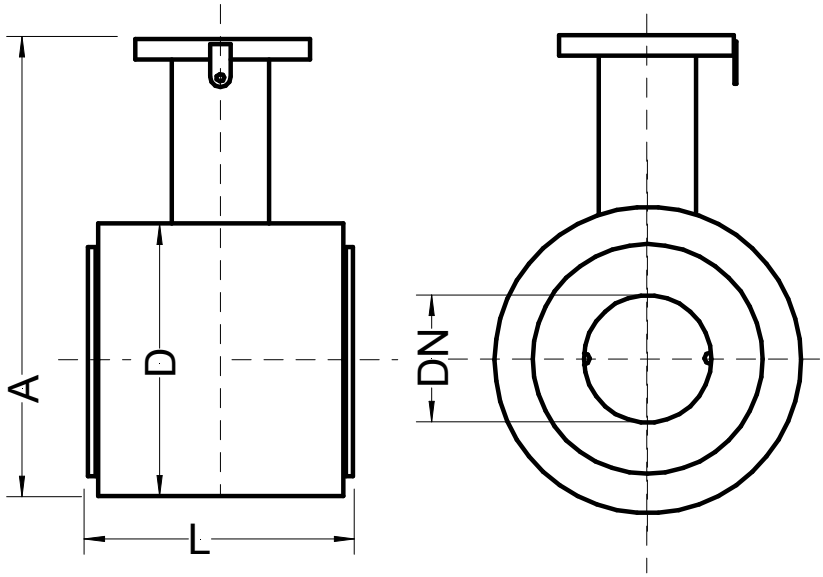

Fig. 61: Dimensions of flangeless sensor

DN	D	A*	L Version TG, MG	L Version NG	L Version T	Weight [kg]
10	62	145	-	-	62	0.8
15	62	145	74	72	70	0.9
20	62	145	74	72	70	1.1
25	74	158	104	102	100	1.5
32	84	168	104	102	100	1.8
40	94	179	104	102	100	2.2
50	107	192	104	102	100	2.8
65	127	212	104	102	100	3.2
80	142	227	104	102	100	3.5
100	162	247	104	102	100	4
125	192	277	134	132	130	6
150	218	303	134	132	130	8
200	274	359	219	217	215	10

Table 6: Dimensions of flangeless sensor

- **Power supply**: pulse DC current 6.25 Hz or 3.125 Hz from the electrical converter
- **Protection**: IP 67
- **Medium operation temperature**: up to 150°C (depending on type of lining)
- **Lining**: soft rubber, hard rubber, resistive rubber, PTFE
- **Storage temperature**: -20°C to 80°C
- **Flow rate range**: 0.1 - 10 m/sec
- **DN**: 10 mm to 1200 mm
- **PN**: 0,6 MPa, 1 MPa, 1,6 MPa, 2,5 MPa, 4 MPa
- **Connection**: flanges, gas thread, food industry thread, flangeless (or other upon agreement)
- **Electrodes**: CrNi steel, Hastelloy C, Platinum (or other upon agreement)

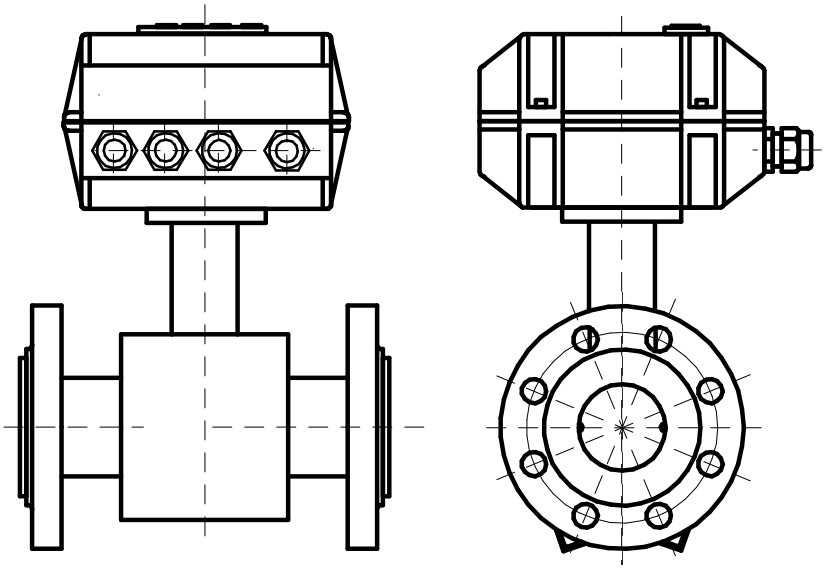

Fig. 62: Compact flow meter assembly in flanged version

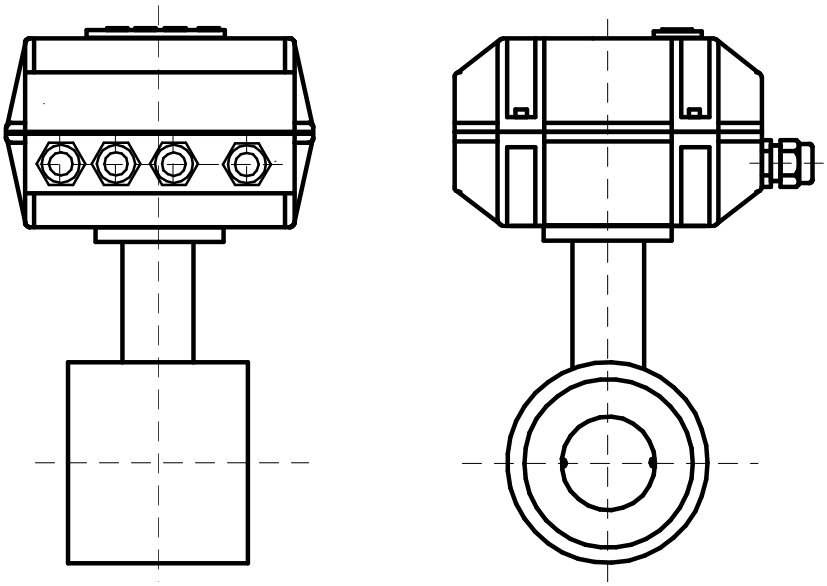

Fig .63: Compact flow meter assembly in flangeless version

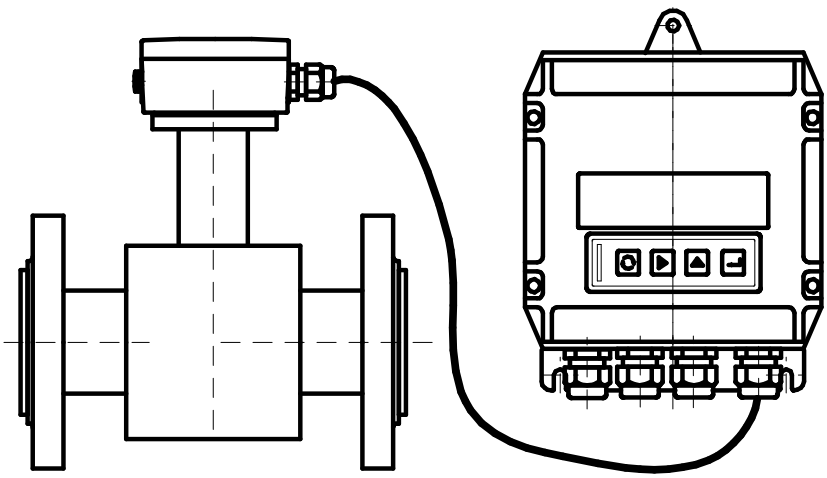

Fig .64: Detached flow meter assembly in flanged version

Type Plates

Sensor Marking

PDIN	50	16	TG	Ss	Ge	
					_	No grounding electrode
					Ge	Optional Grounding electrode
				Ss		Electrodes Stainless steel
				Ha		Electrodes Hastelloy
				Pt		Electrodes Platine
			TG			Lining Hard rubber
			MG			Lining Soft rubber
			NG			Lining Resistant rubber
			PTFE			Lining Hard rubber
		6, 10, 16, 25, 40				Pressure in Bar
		150lb, 300lb				Pressure in lb
	10..1200					Nominal Diameter [mm]
	3/8"..50"					Nominal Diameter [inch]
PDIN						Flanged version - flanges by DIN
PASA						Flanged version - flanges by ASA
PANSI						Flanged version - flanges by ANSI
B						Type Wafer
V						Sanitary fittings (DIN11851)
G						Gas Thread

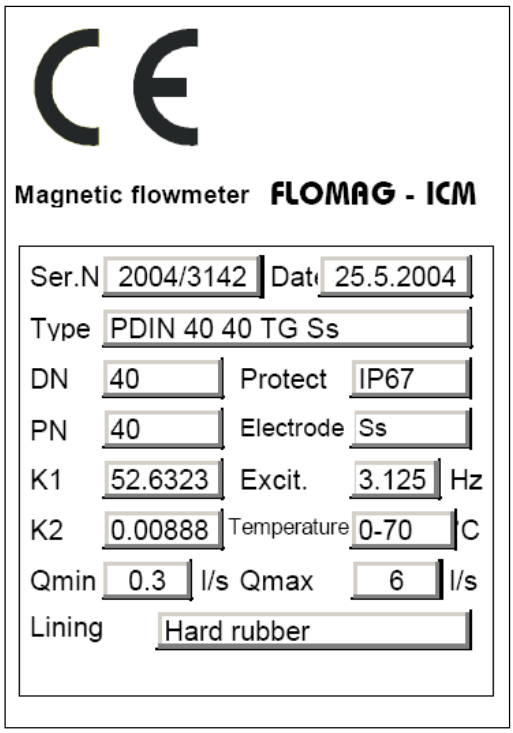

Fig. 65: Sensor type plate

* You can state other non-standard parameters after this marking (increased protection, other colour, other electrode material)

Converter Marking

C	01	+K12	E	115/230V 50Hz	
				115/230V 50Hz	
				24V 50Hz	
				24V=	
				12V=	
			_	version Comfort	
			E	version Economic	
		+Kxx	separated version		**xx** = cable length
		+	compact version		
	01	without RS485			
	02	with RS485			
C	working device				
D	rated device				

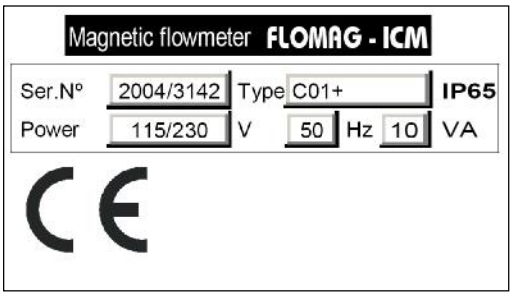

Fig. 66: Electronics type plate

* You can state other non-standard parameters after this marking (increased protection, other colour, special equipment)